AC INDUCTION MOTOR DATA SHEET
IEEE-841 MOTORS

MODEL NUMBER	IEEE3-36-182T		
HORSEPOWER	3		
RPM / POLES	3600 / 2		
VOLTAGE / PHASE	460 / 3		
FRAME	182T		
ENCLOSURE / DEGREE OF PROTECTION	TEFC / IP56		
FREQUENCY	60 HZ		
FULL LOAD SPEED	3515 RPM		
SERVICE FACTOR	1.15		
INSULATION CLASS	F Class N Varnish		
FULL LOAD AMPS; 460	3.8 A		
LOCKED ROTOR CURRENT (% Full Load)	760 %		
NEMA CODE LETTER	J		
EFFICIENCY / POWER FACTOR	LOAD	EFF.	P.F.
	100 %	86.5 %	85.0 %
	75 %	86.7%	81.3 %
	50 %	83.0 %	73.3 %
DUTY CYCLE	S1 / Continuous		
TORQUE	FULL LOAD	LRT	BDT
	4.4 lb.ft	190 %	260 %
NEMA DESIGN	B		
MOMENT OF INERTIA	LOAD (Max.)		MOTOR
	7.712 lb.ft^2		0.071 lb.ft^2
SOUND PRESSURE LEVEL (No Load 1 M From Motor)	73 dB(A)		
MAX. SHAFT VIBRATION	0.08 In/Sec – Peak Velocity		
NUMBER OF STARTS (Hot / Cold)	2 Hot / 3 Cold		
MAX. AMBIENT TEMPERATURE	40° C		
MAX. ELEVATION	3300 Ft. Above Sea Level		
TEMPERATURE RISE (At Full Load)	80° C		
DRIVE-END BEARING	6206ZC3		
OPPOSITE DRIVE-END BEARING	6206ZC3		
BEARING SEAL TYPE	ProTech™ IP66 Labyrinth On DE and ODE		
GREASE TYPE	Mobil Polyrex EM		
MOUNTING	F1 (F2 Suitable), W6, W8, B3, V5, V6		
ROTATION	Bi-Directional		
APPROXIMATE WEIGHT	90 lbs		
AREA CLASSIFICATION	Class I, Division 2, Groups A, B, C, D, T3A		
PAINT	Epoxy		
INVERTER RATING	10:1 CT / 1000:1 VT		
INSULATION TYPE	Hyundai Inverter Shield, Meets NEMA MG1 Part 31		
SPECIFICATION - In Accordance With	IEEE-841, Version 2009, NEMA, CSA		

EEV 109973

CC 038A

REVISED 01/13/17

HYUNDAI HEAVY INDUSTRIES CO., LTD.	IEEE841 TEFC THREE PHASE INDUCTION MOTOR	TYPE	PKP CAST IRON FRAME

FRAME SIZE	OUTPUT(HP)	POLES	Hz	TIME RATING

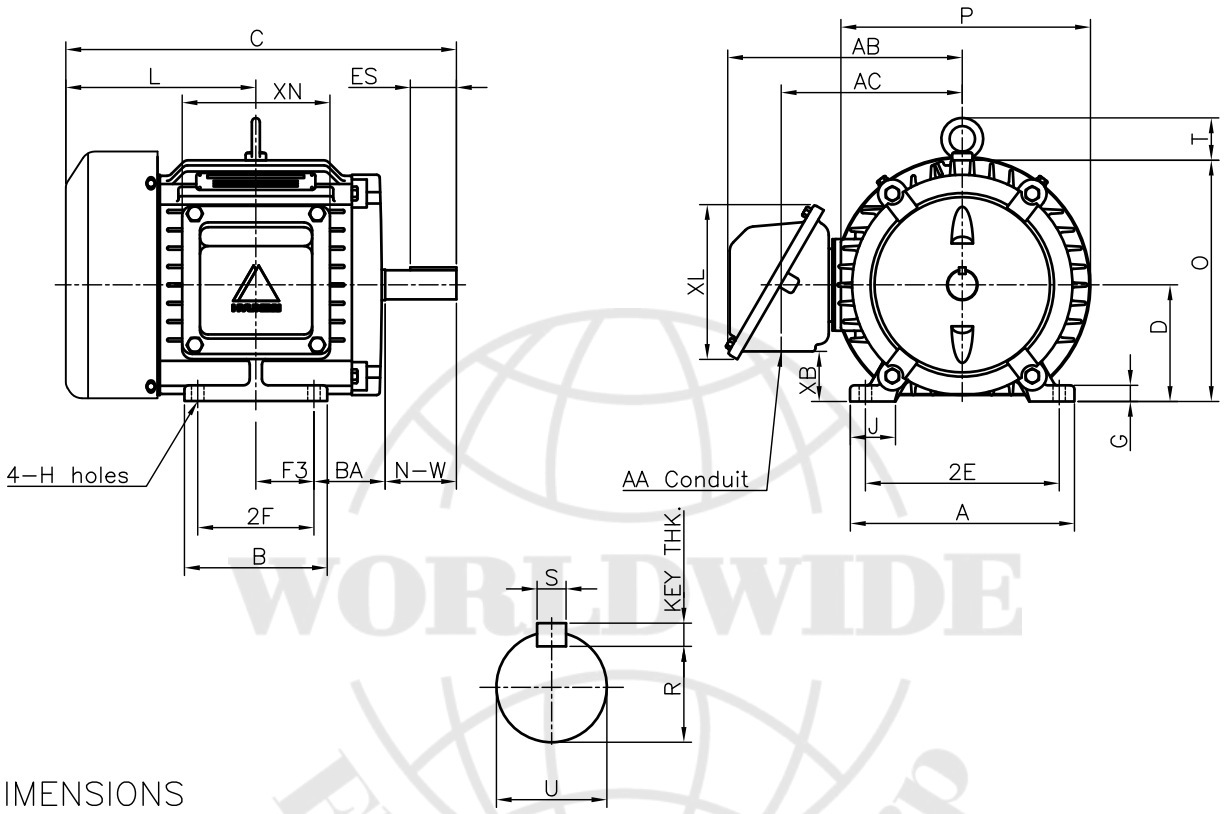

DIMENSIONS

MOUNTING									CONDUIT BOX						APPROX. WGT.(LB)
A	B	2E	2F	–	F3	G	J	H	AA	AB	AC	XB	XL	XN	
8.66	5.52	7.50	4.50	–	2.25	0.62	1.74	0.41	0.75	9.06	7.14	1.93	5.97	5.71	90

OVERALL							SHAFT					KEY THK.	BEARING	
BA	C	D	L	O	P	T	U	N-W	KEYWAY				DRIVE END	OPP. DRIVE END
									R	ES	S			
2.75	15.09	4.50	7.34	9.32	9.64	1.63	1.125	2.75	0.986	1.78	0.250	0.250	6206ZZC3	6206ZZC3

NOTE

1. Dimension "D" tolerance : +0.00inch – 0.03inch
2. Dimension "U" tolerance : +0.000inch – 0.0005inch
3. Dimension "R" tolerance : +0.000inch – 0.015inch

APPD BY	J.H.KIM	UNIT	INCH	SUBJECT	NEMA 182T	CAD PROJ \ FILE SCALE-NEMA\A1103AA
CHKD BY	N.D.LEE	SCALE	1/8	TITLE	OUTLINE	
CHKD BY	K.S.LEE	PROJEC'N	3rd Angle			
DSND BY	S.W.SEO	DATE	2010.12.20			
HYUNDAI HEAVY INDUSTRIES CO., LTD. Electro-Electric System Division				REF. NO	350A8103AA	Sheet No. of
				DWG NO	350A8103AA	Revision No. 0

WORLDWIDE Electric Co.,